MAC 10® LE-DC

FAMILY OF FAN FILTER UNITS

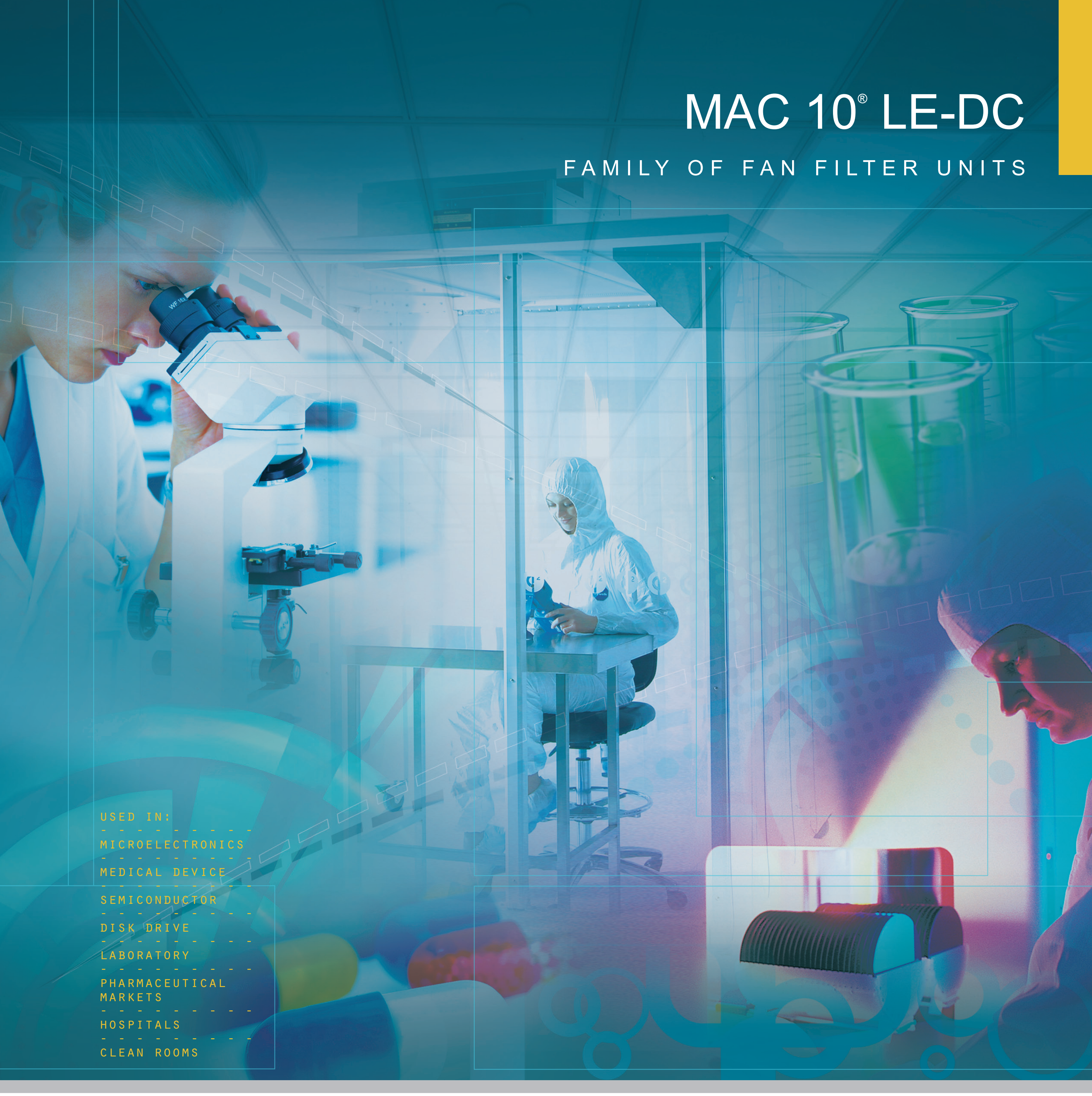

USED IN:

- MICROELECTRONICS
- MEDICAL DEVICE
- SEMICONDUCTOR
- DISK DRIVE
- LABORATORY
- PHARMACEUTICAL MARKETS
- HOSPITALS
- CLEAN ROOMS

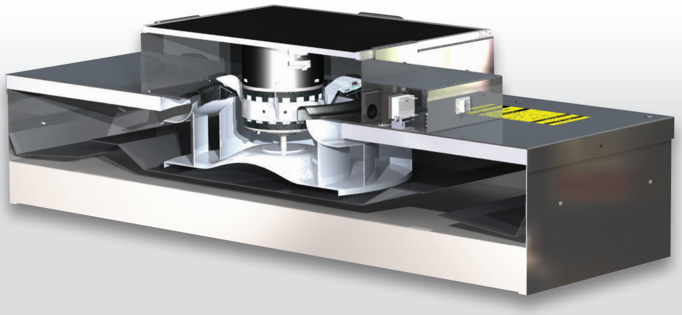

ENVIRCO®

Innovators in clean air technology

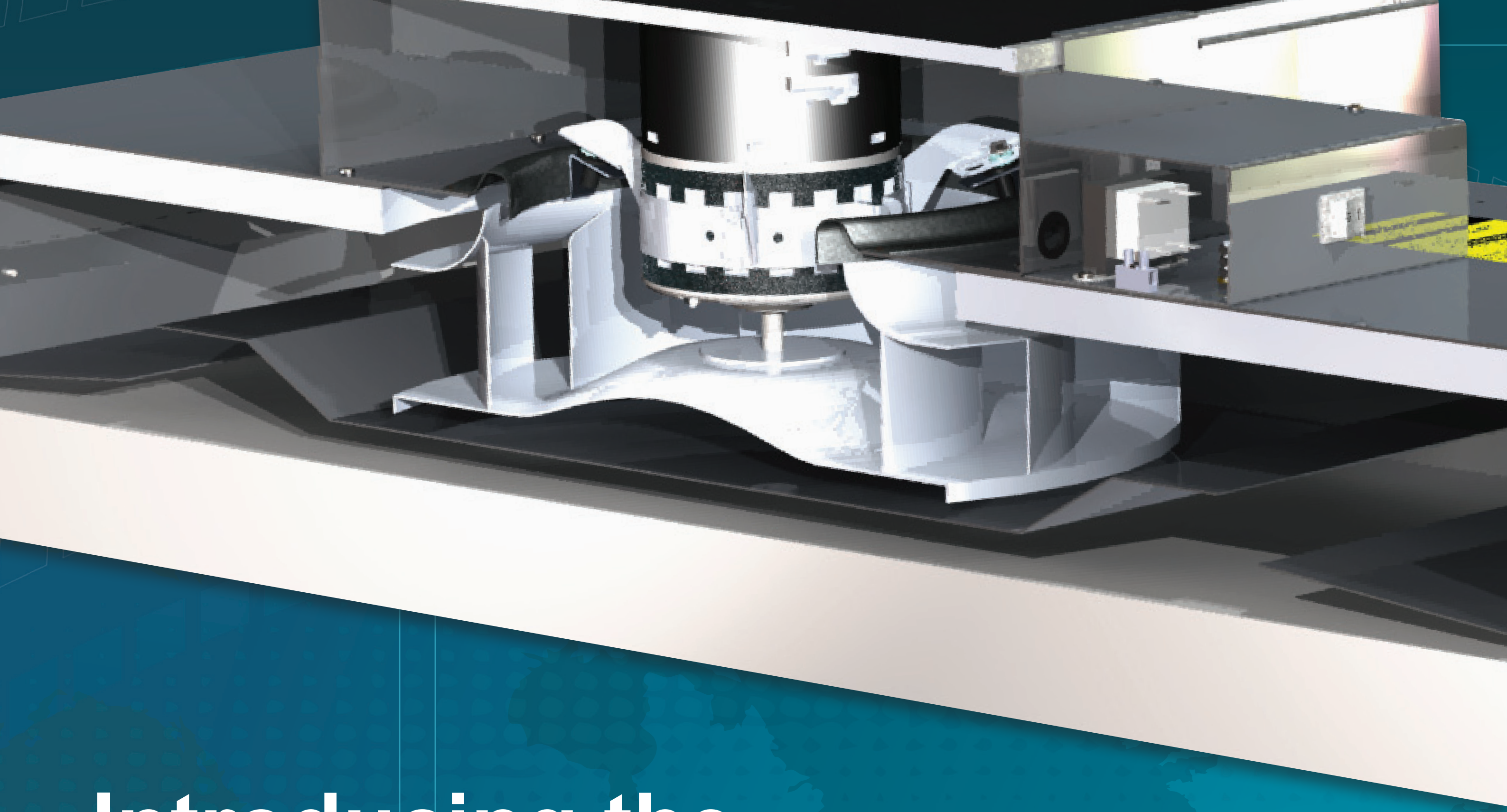

Introducing the Second Generation Fan Filter Unit

MAC 10® LE-DC

A Second Generation FFU

While Envirco® has introduced a variety of proprietary products, one of its most successful continues to be the MAC 10® family of fan filter units (FFUs). We add to this industry's leading line of products a second generation FFU, the MAC 10® LE-DC, which features the most control options and the most versatile control system available on the market today.

A Green Product Solution

The MAC 10® LE-DC FFU can help provide opportunities to earn LEED* points with its many energy-saving features. *Note: LEED (Leadership in Energy and Environmental Design) is the rating system of US Green Building Council by which building designs are certified.*

By taking advantage of a unique combination of DC motor technology with Envirco's proprietary baffling system and backward inclined fan, the LE-DC tops the industry in energy efficiency. Its electronically commutative (EC) motor with internal micro-computer provides energy consumption rates as low as 50W @ 0.45m/s (vane) in clean un-loaded conditions, offers high performance, and delivers a long motor life. Utilising Envirco's experience in FFU development, the LE-DC also features low sound levels of 45 dBA*, which are a MAC 10® family benchmark.

Envirco® MAC 10® FFUs are used worldwide for a variety of critical clean air applications. Learn more about how you can benefit from the LE-DC in your next critical room application. Contact your local Envirco® representative or visit us on the web at www.envirco-emea.com.

* *MAC 10 LE-DC 600x1210mm STD HEPA(H13) unit tested in a reverberation chamber at 0.45m/s (vane) in clean un-loaded conditions.*

ENVIRCO
Innovators in clean air technology

ENVIRCO
Innovators in clean air technology

MAC 10® LE-DC

Features

- Brushless EC motor with internal micro-processor.
- High Efficiency Particulate Air (HEPA) Filter 99.99% @ 0.3 micron (H13).
- 250Pa of external static capability (ESP) at 0.45m/s, except 600x600mm units.
- Backward curved centrifugal fan, except 600x600mm.
- Walkable plenum (excluding pre-filter) rated to 113.4 kg.
- Available in 600x1210mm, 585x1185mm, 600x905mm, 585x885mm, 1210x1210mm and custom sizes.
- CE Marked (230V) units.
- Mill finished aluminium exterior.
- Universal Controller allows the following:
  - Manual control via the integral potentiometer
  - Remote speed control via 0-10V analogue signal
  - Network control via ModBus® compatible RTU network protocol.

Options

- G4 pleated pre-filter (50mm deep).
- Room-side Replaceable (RSR): Gel seal filter available on RSR and RSRE units.
- 9.53mm Challenge Ports: Convenient filter and static pressure ports (standard on RSR & RSRE units).
- Monitoring and Control systems - A range of Console and PLC options are available for stand-alone or integrated BMS network control.
- HEPA (H14), ULPA (U15) and ULPA (U16) filters are also available.

Dimensions

Standard Type

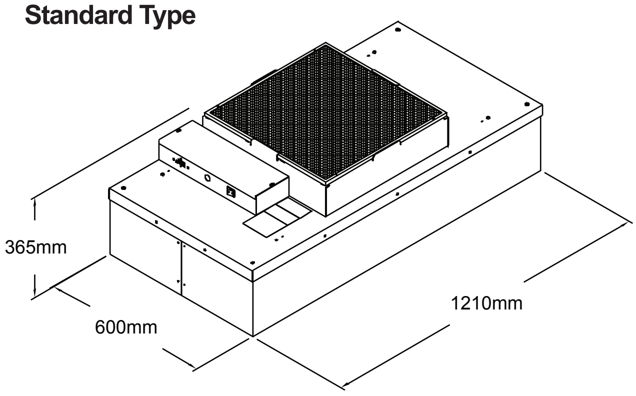

RSR / RSRE Type

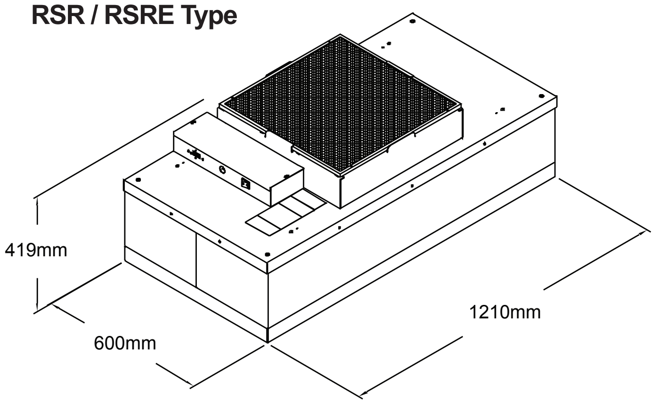

Performance

Nominal Unit Size	Watts at 0.45m/s (Vane)	Unit Weight (kg)
600x1210mm & 585x1185mm LE-DC STD	50	29.94
600x905mm & 585x885mm LE-DC STD	40	23.59
600x600mm & 585x585mm LE-DC STD *	40	18.60
600x1210mm & 585x1185mm LE-DC RSR	55	32.21
600x905mm & 585x885mm LE-DC RSR	45	24.95
600x600mm & 585x585mm LE-DC RSR *	50	20.42

Notes:
All test data is based on a HEPA (H13) filter measured at 0.45m/s (vane) in clean un-loaded conditions.

**The 600x600mm STD, RSRE and RSRE units will be built with a forward curved fan using the same technology as the MAC 10® IQ sold today.*

RSR = Room-side Replaceable filter.

RSRE = Room-side Replaceable filter and motor.

Clean air solutions built for you.

MORE INFORMATION AVAILABLE AT WWW.ENVIRCO-EMEA.COM

Industrial

Cleanroom Products

- MAC 10® Original
- MAC 10® IQ™
- Ducted Ceiling Module (DCM)
- AC or DC Control Systems

Hospital & Healthcare

Hospital & Healthcare

- IsoClean® and IsoClean with Ultraviolet Light
- IsoClean® CM
- AirCeil®

Envirco® MAC 10® and VE5 are registered trademarks of Envirco®, USA. Specifications subject to modifications or changes without notice. US patents 4,560,395 and 5,470,363. Other patents issued and pending in foreign countries. Special thanks to Connect2Cleanrooms for cleanroom photography.

Provided by Your Local Envirco® Representative:

Envirco® Europe, Middle East and Africa
The Cavendish Centre, Winnall Close | Winchester, Hampshire; S023 OLB, UK
tel:+44(0)1962.840465 | fax:+44(0)1962.828619
www.envirco-emea.com | email: TrionEMEAService@airsysco.com

ENVIRCO®
Innovators in clean air technology

MAC10LEDC/1012 | Copyright ©2012 Envirco®. All Rights Reserved.